Making of Fibre Channel Standards

Live Webcast
March 31, 2020
10:00 AM PT

FCIA
FIBRE CHANNEL INDUSTRY ASSOCIATION

Today's Presenters

Joe Kimpler

Independent Industry Expert

Moderator

Barry Maskas

HPE

Presenter

About the FCIA

https://fibrechannel.org/

FCIA
@FCIAnews

The Fibre Channel Industry Association (FCIA) is a mutual benefit, non-profit, international organization of manufacturers, system integrators, developers, vendors, and industry professionals, and end users:

- Promotes the advancement of Fibre Channel technologies and products that conform to the existing and emerging T11 standards
- Maintains resources and supports activities to ensure multi-vendor interoperability for hardware, interconnection, and protocol solutions
- Provides promotion and marketing of FC solutions, educational awareness campaigns, hosting public interoperability demonstrations, and fosters technology and standards conformance
- FCIA provides market direction to the INCITS T11 Task Groups

This presentation is sponsored in cooperation with the FCIA education committee

FIBRE CHANNEL INDUSTRY ASSOCIATION

A Little History

INCITS T11 held its first meeting in February, 1994.

FCIA is celebrating its 25th anniversary and the INCITS T11 standards committee holding its 150th meeting, as the Fibre Channel industry continues to progress, and technical developments are shaping the future of the storage industry.

FCIA is pleased to announce:

1. INCITS/ANSI published the Fibre Channel Physical Interface-7 (FC-PI-7) specification for 64GFC
2. The FC-NVMe-2 standard specification completed the Public Review milestone and is in process of becoming an ANSI standard

Agenda

Pull back the curtain on the FC standards development process:

- What makes something a standard
- The differences between a standard and a specification
- Benefits of standards when architecting Fibre Channel solutions
- Who is INCITS T11 and What's their Role?
- T11 Fibre Channel standards development process
- T11 Fibre Channel Standards
- Decode a few funky common acronyms
- Current Fibre Channel standards under development
- Q&A

Poll Question

Agenda

What makes something a standard

The differences between a standard and a specification

U.S. Standards

Standards are everywhere and have become such an integral part of our existence that data center management requires little or no thought to everyday products and services and how they interoperate.

- **In the world of information technology, companies often document products in the form of a specification, which outlines how it should work and sometimes how it should work with other products. They don't necessarily need a standard to do this. The specification may be promoted for wider use by simply creating a consortium or an interest group to arrive at agreements about how to specify solutions related to interoperability. Some examples may include (but are not limited to) NVM Express (NVMe), OpenStack, GenZ, etc.**
  - The information technology sector cannot sustain discordant voices espousing their own proprietary strategies and approaches.
  - These consortia go beyond just a "gentleman's agreement" about how to do things, and they work hard to produce specifications for solutions to technical problems.
- **A standard, though, goes further than a specification:**
  - Key to the concept of standardization is the role of organizational accountability.
  - A standard has accountability and access facilitated by the producing organization through out its' lifecycle.
- **Unlike most other nations, the United States does not have a single private sector organization or government agency that has overriding responsibility for standards.**

What Makes Something a Standard

1. STANDARDS RESPOND TO A NEED IN THE MARKET

- Standards governance bodies do not decide when to develop a new standard, but responds to a request from industry or other stakeholders such as consumer groups. Typically, an industry sector or group communicates the need for a standard to its national member.

2. STANDARDS ARE BASED ON GLOBAL EXPERT OPINION

- Standards are developed by groups of experts from all over the world, that are part of larger groups called technical committees. These experts negotiate all aspects of the standard, including its scope, key definitions and content. Details can be found in the list of technical committees.

3. STANDARDS ARE DEVELOPED THROUGH A MULTI-STAKEHOLDER PROCESS

- The technical committees are made up of experts from the relevant industry, but also from consumer associations, academia, NGOs and government.

4. STANDARDS ARE BASED ON A CONSENSUS

- Developing standards is a consensus-based approach and comments from all stakeholders are taken into account.
- It can help give you early access to information that could shape the market in the future, give your company a voice in the development of standards and help to keep market access open and current.

What Makes Something a Standard

Under the American National Standards Institute (ANSI) umbrella, U.S. industry, Standards Developing Organizations, and government must act collectively to shape the international standards framework and level the international playing field.

The International Organization for Standardization (ISO) defines a standard as a "document, established by consensus and approved by a recognized body that provides – for common and repeated use – rules, guidelines or characteristics for activities of their results, aimed at the achievement of the optimum degree of order in a given context."

Standards are a voluntary baseline of rules, conditions, or requirements that are applied to a product's definition of terms, component classifications, material specifications, performance, or operations. A standard can also delineate procedures involved with a product or the measurement of a product's quantity or quality.

Incentives to comply with standards are substantial, as those products that do not meet the baseline levels often are less appealing to global consumers.

- **Formal standards development is based on openness and due process**
- **No one with a direct or material interest is prevented from expressing a viewpoint in the creation of formal standards**
- **Due process ensures equity and fair play in the development process**

The information technology sector is where Small Computer System Interface (SCSI), Fibre Channel (FC), and Advanced Technology Attachment (ATA) standards are developed under the governance of the International Committee for Information Technology Standards (INCITS).

Every Organization in the IT Sector has its Own Way of Doing Things

- T11 is responsible for Fibre Channel
- T10 is responsible for all SCSI projects
- IEEE is responsible for FireWire IEEE1394
- Internet Engineering Task Force (IETF) is responsible for iSCSI and the Internet
- InfiniBand Trade Association is responsible for InfiniBand
- USB Implementers Forum, Inc. is responsible for the Universal Serial Bus (USB)
- NVM Express™ (NVMe™) the non-profit consortium is responsible for defining, managing and marketing NVMe technology
- PCI-SIG is a community responsible for developing and maintaining the standardized approach to peripheral component I/O data transfers
- SNIA - The Storage Networking Industry Association is a non-profit organization with a mission to lead the storage industry in developing and promoting vendor-neutral architectures, standards and educational services that facilitate the efficient management, movement and security of information. (SMI-S, Swordfish™, and SFF)

Standards based, consortium based, work group based, task force based, non-profit, community based or just one company can promote use of specific information technologies:

- there are degrees of incompatibilities and interoperability risk without standards and cross organizational collaboration

Examples of cross organizational collaboration:

1. Working jointly, T10 and T11 committees published the Fibre Channel Protocol for SCSI, Fifth Version (FCP-5) revision.
2. T11 in collaboration with NVM Express™ developed an FC transport protocol standards (FC-NVMe and FC-NVMe-2) based on NVMe-oF (revision 1.0/1.0a/1.1)specifications.
3. The SNIA SFF Technology Affiliate (TA) Technical Work Group (TWG) carries forth the longstanding SFF Committee work efforts that has operated since 1990 until mid-2016. In 2016, SFF Committee leaders transitioned the organizational stewardship to SNIA.

What Makes Something a Standard

Standards LifeCycle

Many sources, internal and external, of project proposals to INCITS T11 for formal approval

face-to-face meetings

finalized writing, reviewed, and approved by the Working Group

submitted to the Committee for Ballot

balloted draft is reviewed and updated and submitted to the Board for approval

approved standard is published and can be purchased from: ANSI

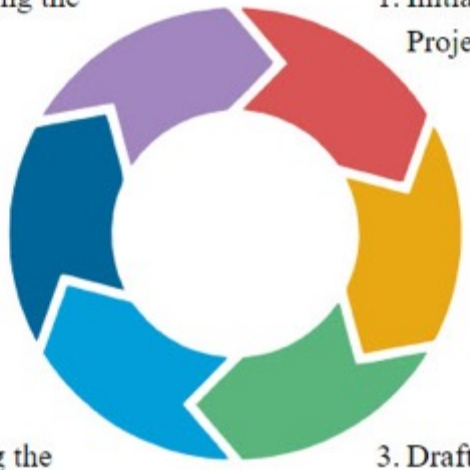

Information technology standards are "living documents.
Standards conformance precedes interoperability.

Benefits of a Standard

Have you heard of T12?

T12 is about standardizing fluorescent and incandescent lighting and fixtures.

The U.S. government standardized commercial fluorescent lighting in 1938, long before computer information technologies needed standardization.

- Fluorescent tubes standards are based on the diameters of the tubes.
- T8 has a one inch (8/8 inch) diameter, a T5 has a 5/8 inch diameter, and a T12 is a 12/8 inch diameter.
- If a T12 and a T8 use the same bi-pin base, you can use them interchangeably with the same lighting fixture.

Today one is able to upgrade T12 fixtures with compatible LED based T12 bulbs.

This example highlights the advantages of standards and how the specifications can have multi-generational compatibility and enable interoperability with benefits to all those materially invested.

Agenda

Benefits of standards when architecting Fibre Channel solutions

Standards as Interoperability Building Blocks

INCITS T11 FC standards are used in scores of nations and facilitate global and secure interoperability through:

- Compliance, Conformance, and (backwards) Compatibility
- standards-compliance provides the criteria for interoperability because there are quantifiable tests that the standards provide
- INCITS T11 FC standards provide criteria and definition for interoperability test development based on conformance
  - shall - denotes a requirement that is mandatory whenever the criterion for conformance with the specification requires that there be no deviation

INCITS T11 FC standards establish the common core of expectations that a product must meet for FC Interoperability

Two of the most important aspects of INCITS T11 FC standards are:

1. backwards compatibility
2. "plug and play" - utilize existing infrastructure with new speeds and features
3. These are "must-haves", and are defined in the T11 Projects scope of work along with the requirement not to obsolete existing standards

- FC standards and FC protocol have unique deterministic and reliable block storage transport characteristics to protect what is important:
  - data and data availability
  - Fibre Channel is a <u>trusted technology</u> because it was purpose built for storage networking
  - T11 standards establish criteria for implementation validation while also serving to define interoperability requirements
  - T11 standards provide a means to determine what can be done and how a standards-based solution can be implemented
  - T11 standards allow for definition of testing criteria to measure against

Benefits of FC standards

- **FC standards establish the common core of expectations that a product must meet for FC Interoperability – which is TRUSTed through validation**

- **Two of the most important aspects of INCITS T11 FC standards are backwards compatibility and "plug and play" to utilize existing infrastructure with new speeds.**
  - these are "must-haves," and so are defined in the T11 Projects scope of work along with the requirement not to obsolete existing standards

- **INCITS T11 FC standards are used in scores of nations and facilitate global and secure interoperability through:**
  - Compliance, Conformance, and (backwards) Compatibility

- **Data Integrity: FC standards and FC protocol have unique deterministic and reliable block storage transport characteristics to protect what is important:**
  - your data and data availability

Standards as Interoperability Building Blocks

The INCITS T11 protocol standards provide many implementation options defined by SHALL and SHOULD statements.

- Protocol mappings enable FC to transport many types of traffic, for example SCSI3 and NVMe and also data associated with application-level services such as FC Name Services.
- Protocol mappings are specified by T11 committees, but some are defined by other organizations, for example SCSI-3 mappings are defined by INCITS T10 committees.

INCITS FC standards provide criteria and definition for interoperability test development based on conformance

- **should** - denotes a guideline, best practice, or recommendation whenever noncompliance with the specification is permissible
  - (implementation choices permitted)
- sometimes use of **can** and **will** are accepted – these statements imply intent and require verification
- standards avoid **must, might, could,** and **may** – these statements are not subject to verification

When the physical layer of Fibre Channel changes, the upper layers of the protocol don't need to change unless you want to utilize new features or functions which come with FC evolution

- Link rate is often the top item used when comparing FC generations, however - the feature set is the same from one link rate to another

FC industry standards based collaboration

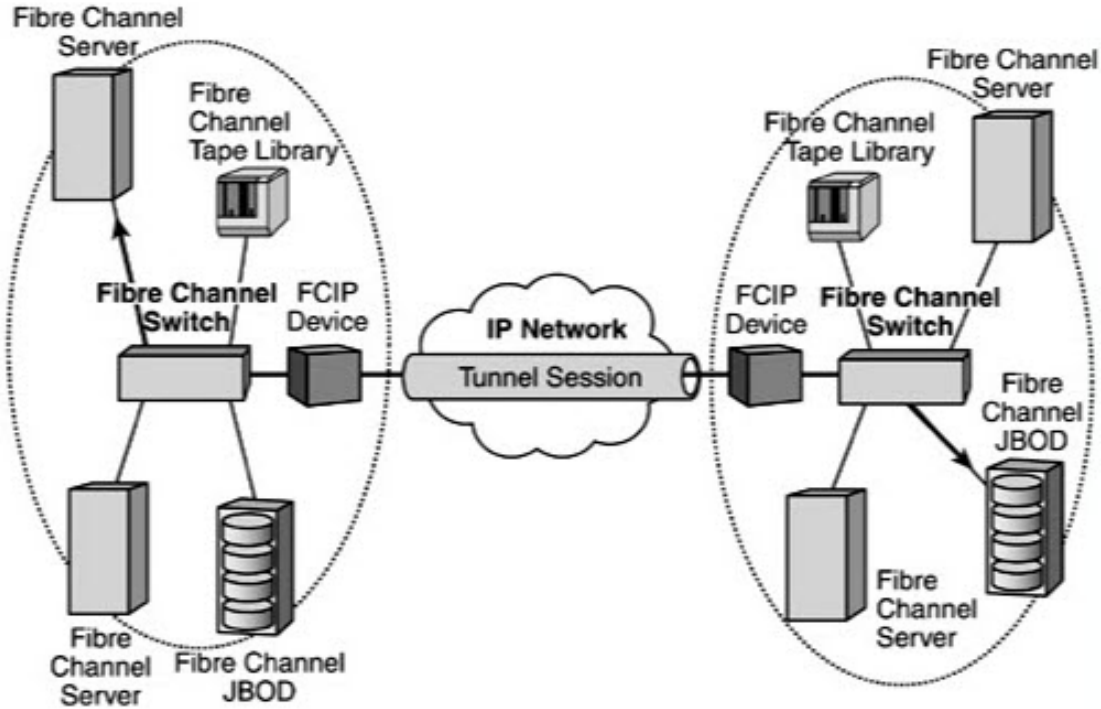

Poll Question

FC Interoperability Then, Now, and Tomorrow

1. layered standards
2. multi-generation interoperability
3. multi-generation compatibility
4. in-order lossless fabric transport
5. flexible (FCP, flash and FC-NVMe)
6. scalable
7. resilient high availability
8. innovative platform
9. trusted and rock-solid reliability
10. built in data integrity and security
11. predictable performance
12. long distance solutions
13. disaster proof solutions
14. interoperable speeds – future proof

Agenda

Who is INCITS T11 and What's their Role?

http://www.incits.org/

INCITS

@INCITS

Information Technology Standardization Committees

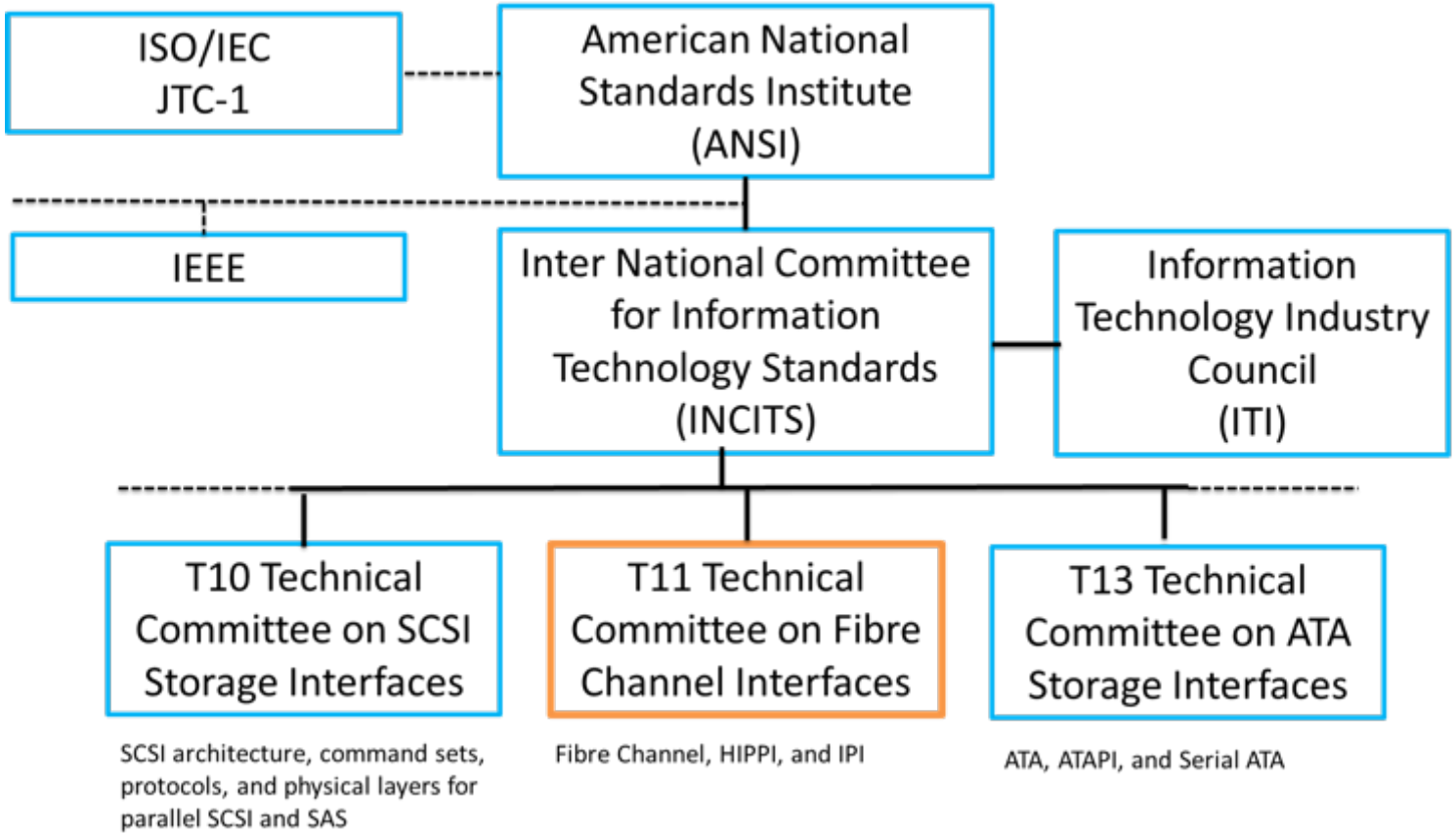

Who is INCITS T11?

INCITS T11 is the parent committee of Task Groups T11.2 and T11.3.

INCITS/T11 is the U.S. TAG to ISO/IEC JTC 1. INCITS T11 coordinates the work of the Task Groups and retains overall responsibility for work area. INCITS T11 assumed the program of work of the predecessor Task Group X3T9.3 following a reorganization of TC X3T9.

- **INCITS T11 is responsible for standards development in the areas of Intelligent Peripheral Interface (IPI), High-Performance Parallel Interface (HIPPI) and Fibre Channel (FC). For the past few years the focus is on Fibre Channel.**
- **Fibre Channel (FC) is a high-speed network transport technology that interconnects network elements and allows them to communicate with one another. Fibre Channel is primarily used in storage area networks (SANs) because it provides reliable, lossless, in-order data block (frame) transport delivery, achieved utilizing a per link level credit mechanism between initiators, switches, and targets.**
  - These basic properties of Fibre Channel make for a stable platform for many varied computer workloads which heavily depend on the computer to storage I/O behavior.
- **INCITS T11.2 - The physical variants Task Group within Technical Committee T11 is responsible for all projects and parts of projects dealing with physical variants i.e. media, connector, transmitter, and receiver requirements.**
  - T11.2 held its first meeting on August 5, 1997 and today has standardized FC-PI-7 which includes 64GFC single link and parallel links 256GFC, and continues to develop the next generation of transport speedup.
- **INCITS T11.3 - The Interconnection Task Group within Technical Committee T11 is responsible for all FC projects which define Fibre Channel Interconnection Schemes.**
  - T11.3 held its first meeting on April 23, 1998. The primary focus of T11 activities has been directed towards the Fibre Channel (FC) family of transport standards. Included in the FC family are mappings which allow protocols from the IP, HIPPI, and NVMe standards families to be transported across Fibre Channel.

The INCITS Process

- **FC standards are developed in accordance with INCITS governance and hence are open for public review and comment during the review period.**
  - One may consider the public review process as a technology preview of a consensus based standards development processes designed to ensure that voluntary standards have consensus, and are ratified by recorded vote, of directly and materially affected interests.
- **Actions related to processing an INCITS standard, such as new approvals, reaffirmations, adoptions, revisions and withdrawals are also posted for public review and comment in the American National Standards Institute (ANSI) Standards Action that can be found on the ANSI (ansi.org) website.**
- **Technical reports are informational or tutorial in nature, and they do not contain matter implying that they are preferred or recommended embodiment. They are produced, in some cases, to provide an example for the purpose of disseminating the technical and logical concepts in standards already published or under development. In other cases, they derive from studies in areas where it was found premature to develop a standard due to a still changing technology, or inappropriate to develop a rigorous standard due to the existence of a number of viable options.**
- **INCITS has two types of technical reports:**
  1. Those approved and published by INCITS as INCITS Technical Reports
  2. Those approved and published by INCITS and registered with ANSI
- **INCITS maintains a list of approved standards and technical reports which have been projects that were developed using the national process as defined by the INCITS procedures.**

The INCITS Process

At INCITS, the program of work is segmented into projects, each related to the development of a specific Standard, Technical Report (TR), or study area. Each project is assigned to a Technical Committee, Task Group, or Study Group. Many of these committees also serve as U.S. Technical Advisory Groups (TAGs) for the development of U.S. positions to the ISO/IEC JTC 1 or ISO Subcommittees.

- **INCITS facilitates notice of public review and comment of projects. The public review and comment period is required for INCITS Draft American National Standards, including the national adoption of International Organization for Standardization (ISO) and International Electrotechnical Commission (IEC) standards as American National Standards, and on proposals to revise, reaffirm or withdraw approval of existing American National Standards.**
- **The public review and comment period also serves as a call for patents and any other pertinent issues (copyrights, trademarks).**
- **INCITS announces that document(s) have been circulated for a 60-day public review and comment period as specified on each notice. Comments received during the period noted will be considered and answered.**
  - Commenters who have objections, suggestions or comments should so indicate, include their reasons and suggested alternative language.
  - Comments must be resolved by the Technical Committee

Once all the work is complete, the standard is forwarded for approval by the INCITS Executive Board.

- **The INCITS Executive Board (EB) is the consensus body that gives final approval to standards in the INCITS process.**
  - The members of the Executive Board represent a diverse group of organizations from hardware and software vendors, government agencies, universities, consortia, and other organizations.
  - The EB is responsible for ensuring accreditation, advancing the interests of the Information and Communication Technology (ICT) sector which is made up of the manufacturing and services sectors whose main activity is linked to development, production, commercialization and use of new technology, while maintaining a viable, level playing field for furthering information technology.

Setting the Standard in Setting Standards

- T11 Members participate by working on one or more technical committees (TC) or study groups to build a consensus approach to a particular standard – collaboration with other organizations is fundamental to this process.
  - There are two categories of INCITS membership: Voting and Advisory (Non-Voting).
  - T11 committees have **face-to-face** meetings six times a year and are developing standards and maintaining standards with an eye to multi-generational compatibility and interoperability.
  - T11 Plenary meeting include liaison reports from/to IEEE 802, SINA/SFF, T10, NVMexpress, Optical Internetworking Forum (OIF), FCIA, ISO Interconnection of IT Equipment WG3/TIA, and others as needed

- Voting Membership: Voting membership is open to any company, consortium, or individual materially affected by a standards issue. There is a fee associated with this membership level to fund the administrative work that is involved with any development process.

- A representative of a prospective voting member shall initially attend a meeting of the appropriate committee or group without voting privileges. Voting privileges become effective with attendance at one of the next two successive meetings and receipt of the applicable fees for the membership year.

- If a group is meeting to focus on a new standard, all attendees at the formation meeting or its next follow-up meeting shall be considered voting members.

- Advisory (Non-Voting) Membership: All advisory memberships are non-voting memberships. Advisory members may attend meetings, speak, and submit contributions to the development of a standard. Any party that pays the designated service fee can be an advisory member.

INCITS T11 Member Companies

Voting	Advisory	Prospective Voting
Amphenol Corporation	Futurewei Technologies Inc.	OFS Fitel LLC
Broadcom Inc.	Hewlett Packard Enterprise	Panduit Corporation
CIENA	IBM Corporation	TE Connectivity
Cisco Systems Inc.	Keysight Technologies Inc.	Teledyne LeCroy Corporation
ComScope	Lumentum Operations	Unisys Corproation
Corning Inc.	Macom	VIAVI Solutions Inc.
Data Center Systems	Marvell Semiconductor Inc.	Vmware Inc.
Dell Inc.	MediaTek USA Inc.	Anritsu Corporation
Finisar Corporation	Molex Inc.	Emeritus: Mr. James Coomes Mr. Robert Kembel Mr. Schelto Van Doorn
Fujitsu America Inc.	NetApp Inc.	Emeritus: Dr. William Ham Mr. Robert Nixon

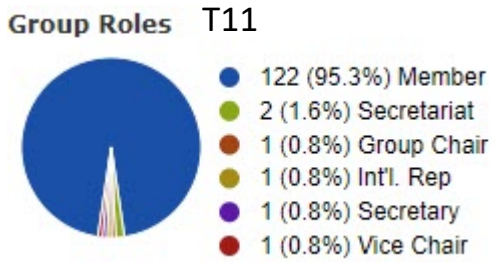

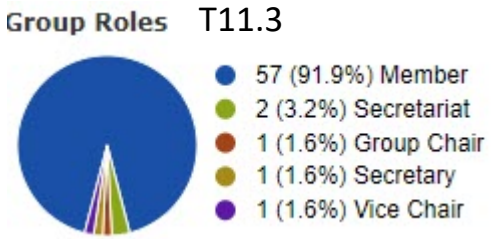

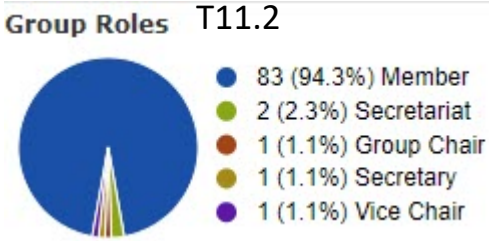

INCITS T11 Committee Members

Agenda

T11 Fibre Channel standards development process

T11 Fibre Channel Standards

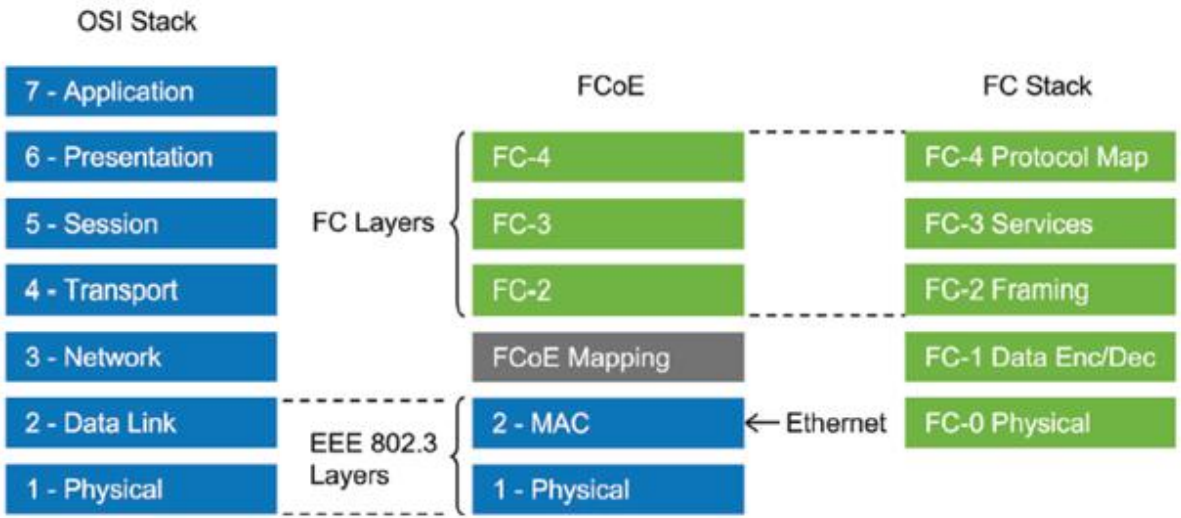

https://standards.incits.org/apps/org/workgroup/t11/index.php

https://www.facebook.com/search/top/?q=t11%20fibre%20channel%20technical%20committee&epa=SERP_TAB

INCITS T11 Standards are Organized

- INCITS T11 standards are logically and loosely organized into a five functional layered model, FC0 to FC4.
  - The T11 technical committees generally are aligned to each layer and function of that layer
  - The layers of the Fibre Channel model are referred to as levels in ANSI documentation.
- The Fibre Channel architecture is defined by a series of specifications published by INCITS T11 Task Groups for ANSI management.
- The Fibre Channel architecture operates at the physical, data-link, and application layers.
- Fibre Channel model layers build upon each other starting with FC-0 as the foundation.
  - One notable exception is the FC-3 layer. FC-3 builds upon the node-addressing functionality within FC-2. However, link services defined by FC-3 are required for FC-2 operation. Hence, FC-3 resides above and below FC-2.
  - Perhaps it is better to represent FC-2 and FC-3 as peers.

INCITS T11 Standards are Organized

Fibre Channel Model	Fibre Channel Implementation Standard
FC-4 (T11-3, T10, etc.) (protocol mappings)	FCP, FC-SB, FC-GS, FC-NVMe, FC-BB, FC-SP FC-4: Protocol-mapping layer, in which upper level protocols such as NVMe, SCSI, IP or FICON, are encapsulated into Information Units (IUs) for delivery to FC-2.
FC-3, FC-2 (T11-3) (common services)	FC-LS, FC-FS, FC-DA, FC-SP FC-3: Common services layer, a thin layer that could eventually implement functions like encryption or RAID redundancy algorithms; multiport connections
FC-2, FC-3 (T11-3) (network and framing)	FC-FS, FC-SW, FC-MI, FC-DA, FC-AL, FC-EE, FC-SP FC-2: Network Layer consists of the low level Fibre Channel protocols; port to port connections.
FC-1 (T11-2, T11-3) (data link encoding/decoding)	FC-FS, 10G FC, FCoE mapping FC-1: Transmission protocol or data-link layer, encodes and decodes signals
FC-0 (T11-2) (physical layer)	FC-PI, 10G FCFC-0: The interface to the physical media; transceivers, cables, etc.

FC-NVMe-2 Example - Organization

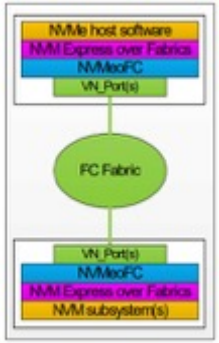

T11.3 Workgroup FC-NVMe-2 – structure for technical committee (TC) member participation

(T11 Chair) Broadcom Inc.

(T11 Vice Chair and T11.3 Chair) Marvell Semiconductor

(T11.3 Vice Chair) IBM Corporation

(FC-NVMe-2 Chair) Marvell Semiconductor

(FC-NVMe-2 Editor) Broadcom Inc.

Approved Project Scope Summary:

This project recommends the development of a set of technical additions and clarifications to INCITS 540, Fibre Channel Non-Volatile Memory Express (FC-NVMe). Included within this scope are:

1. enhancements to the protocol
2. corrections and clarifications
3. any other item as deemed necessary during development

Patent Declarations Received: Yes

T11.3 TC face-to-face meetings held every 2-months to review and discuss presentations, record notes, track and assign action items, draft standards text, agree on text, and vote on incorporation to proposed standard draft document.

The TC presents proposals for changes, additions, corrections, etc.. which are discussed and agreed to by consensus for incorporation to the proposed standard.

The TC editor incorporates the text and then reviews the draft with the TC.

When the proposed standard is agreed to by consensus ballot it is forwarded for T11 for further processing

FC-NVMe-2 Example- Technical Workgroup

Example of TC presentations (which are iterative) that were incorporated by consensus vote :

Revision 1.07 (2019-00077-v006) - RFC ballot resolutions
revision 1.06 (2019-00077-v005) - RFC ballot resolutions
revision 1.05 (2019-00077-v004) - RFC ballot resolutions
revision 1.04 Updated SLER informative annex diagrams - Error detection and recovery examples
revision 1.03
- (2018-00155-v005) - SLER informative annex diagrams - Error detection and recovery examples of Sequence level error recovery capability
- (2018-00328-v001) - Lost Read Data Enhancement
- (2018-00262-v001) - NVMe_CMND IU Extension for PI

revision 1.02
- (2018-00221-v002) - **Proposed modifications to FC-NVMe-2 due to NVMe-oF TP 8005: Transport: End-to-End Flow control Alternative to SQ flow control**
- (2018-00261-v001) - Lost command Exchange handling

revision 1.01
- (2018-00103-v003) - FC-NVMe-2 Sequence level error recovery additions
- (2018-00047-v007) - FC-NVMe-2 Sequence Level Error Recovery
- (2018-00129-v002) - FC-NVMe(-2) and NVMe Keep Alives (slide 7)

revision 1.00
- (2017-00419-v004) - Revisions to FC-NVMe-2 for change in delete association actions by initiator and target NVMe_Ports.
- (2018-00040-v001) - Admin Command determinism (slide 4)

revision 0.00 initial draft standard based on FC-NVMe standard

FC-NVMe-2 Example - Process

- After each bi-monthly face-to-face meeting, summary meeting notes are presented at T11.3 and at T11 plenary meeting and recorded in meeting minutes which are corrected and approved at the next plenary meeting
- When the TC has completed a review of the edited proposed standard, and reaches consensus on the text, a ballot vote (one vote per member company) is taken to request T11 hold a public review
  - The FC-NVMe-2 TC ballot was approved 11/21/2019
- At the October 2019 T11 plenary meeting, T11.3 recommended that T11 request INCITS to initiate a T11 letter ballot to approve the dpANS 556-2020x T11-2019-00341-v001.pdf REV 1.07 forwarding for first public review:
  - comments sent to: comments@standards.incits.org
  - FC-NVMe-2 Public Review Start Date 01/03/2020 - End Date 03/03/2020
- Comments received during the 60-day public review are resolved by the T11.3 FC-NVMe-2 and incorporated by the editor and a revised document is provided for TC review and then forwarded to INCITS for the 14-day Executive Board (EB) review and a ballot.
  - FC-NVMe-2 is currently being prepared for EB approval
  - Once approved by the EB, the proposed standard if forwarded to INCITs for ANSI approval and publication as an American National Standard.

Agenda

Decode a few funky common acronyms

What’s With the Funky Acronyms?

Each INCITS T11 standard document contains a section dedicated to definitions and conventions.

- **FC-PI FC-0: The interface to the physical media; transceivers, cables, printed circuit boards, connectors, etc.**
- **FC-FS and FC-SW FC-1: Transmission protocol or data-link layer, encodes and decodes signals**
- **FC-LS FC-SW FC-2: Network Layer consists of the low level Fibre Channel protocols; port to port connections.**
- **FC-GS FC-3: Common services layer, a thin layer that could eventually implement functions like encryption or RAID redundancy algorithms; multiport connections**
- **FC-GS FC-4: Protocol-mapping layer, in which upper level protocols such as NVMe, SCSI, IP or FICON, are encapsulated into Information Units (IUs) for delivery to FC-2.**
- **FC-GS standard specifies Generic Services that may be used to support management and operation of a Fibre Channel Fabric. It includes Services relating to device and topology discovery, Fabric Zoning, Fibre Channel security, time synchronization, address alias groups, event reporting, and performance monitoring.**
  - The Fibre Channel Generic Services (FC-GS-7) standard describes in detail Generic Services introduced in FC-FS-4. In addition, FC-GS describes any ancillary functions and Services required to support Generic Services.

What's With the Funky Acronyms?

T11 - Fibre Channel Interfaces

- FC-BB-5 BackBone (Fibre channel over Ethernet - FCoE)
- FC-FS-6 Framing and Signaling
- FC-GS-9 Generic Services
- FC-IFR Inter-Fabric Routing
- FC-LS-4 Link Services
- FC-NVMe-2 FC transport of Non-Volatile Memory Express and enhanced error handling
- FC-PI-7 Physical Interface specifications and conformance criteria
- FC-SB-6 Single Byte Command Set
- FC-SW-8 Switch Fabric
- FC-TAPE Tape controller command transport

Joint Work of T11.2 and T11.3

T11.2 - Physical Variants

T11.3 - Fibre Channel Interconnection Schemes

Fibre Channel Foundational Fabric Services

FC-CT protocol provided fabric services

- Technical name is FC-CT protocol (Common Transport for Generic Services)
  - ✓ FC Generic services protocol
    - fabric services centrally located in each switch (embedded)
    - Provides the control plane for information transfer between devices
    - Distributed services
  - ✓ Principal switch and Domain ID assignment
  - ✓ Fabric Shortest Path First (FSPF) routing protocol Routing and ISL initialization (synchronization)
- Name Server – Fabric, Distributed
- Zoning – Security and Access controls, Distributed zoning; Seamless scalability

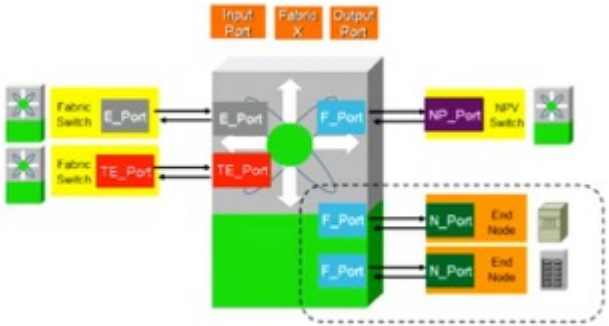

Centralized FC Fabric Services

Fabric Login Server	Name Server	Fabric Controller	Management Server
Used during a node's fabric login process. FC address – domain ID, area ID and port ID assigned during login. Located at a well known address FFFFFE Scale: 239 domain ID addresses 239 x 256 areas x 256 ports = 15663104 possible node ports	Responsible for name registration and management of node ports. Located at well known address FFFFFC	Responsible for managing and distributing registered state change notifications (RSCNs) to attached node ports. Responsible for distributing SW-RSCNs to every other switch. SW-RSCNs keep the name server up-to-date on all switches. Located at well known address FFFFFD	Enables FC SAN management using fabric management software Located at well known address FFFFFA

Agenda

Fibre Channel standards under development

INCITS/T11 Project Status

T11.3	**Milestone 1** Approval of Proposal	**Milestone 2** Notification to public	**Milestone 3** Technical Development	**Milestone 4** Initial Public Review	Pre-edit	**Milestone 5** Executive Board Approval	**Milestone 6** ANSI Approval
FC-SW-7 INCITS 547	x	x	x	x	x	x	xANSI approval notice 03/10/2020
FC-SW-8 INCITS 568	x	x	Under development				
FC-LS-4 INCITS 553	x	x	Under development	x	x	x	
FC-LS-5 INCITS 569	x	x	Under development		x		
FC-GS-8 INCITS 548	x	x	Under development	x	x	x	xANSI approval notice 03/03/2020
FC-GS-9 INCITS 570	x	x	Under development				
FC-NVME-2 INCITS 556	x	x	x	x PReview closed 03/03/2020			
FC-FS-6 INCITS 562	x	x	Under development				
T11.3							
FC-PI-7 INCITS 543	x	x	x	x	x	x	x
FC-PI-7P INCITS 559	x	x	Under development				
MSQS-3 INCITS/TR 52	x		Under development				
FC-PI-8 INCITS 560			Under development				

FC-PI-7 (64GFC) an ANSI Standard

The 5th revision of the FC physical layer (FC-PI-7) standard evolved from 1/2/4GFC to 64GFC, or 100MB/s to 6400MB/s per port, providing twice the throughput of 32GFC.

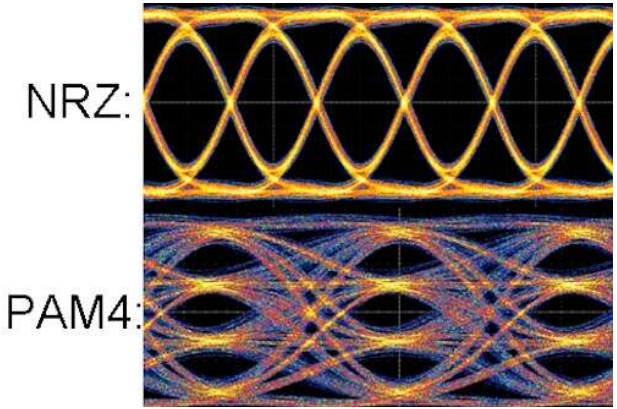

- 64GFC is backward compatible to 32GFC and 16GFC
  - Backward compatibility and “plug and play” to utilize existing infrastructure with new speeds is always a must have for FC development
  - New physical layer and specification for PAM4
- Existing cable assemblies plug into 64GFC capable products
  - LC (connector) and SFP+ (form factor); OM3 and OM4 MMF
- Reach
  - 100 meters for MMF short reach optical variant using OM3/OM4 cable plants
    - OM4 optical fiber has a higher optical bandwidth than OM3 fiber which leads to longer reach at a given speed
  - 10KM for single mode (SMF) optical variant
  - Electrical variant for backplane applications
- 64GFC doubles the throughput of 32GFC
- Corrected bit-error-rate (BER) of >1e-15F achieved through use of forward error correction (FEC)

FC-NVMe/FC-NVMe-2

FC-NVMe Standard was T11 ratified 08/10/2017

- Limited link level error recovery included
- Protocol level error recovery was limited due to SCSI and NVMe having their own procedures
- FC transport support is available in Unified Host/Target SPDK
- MPIO optimizations continue to be evolved by the Linux community

Why FC-NVMe-2 ?

1. Bit errors happen – sometimes just due to optics temperature, cosmic particles, laser wearout, hardware fails, and software fails - basically resulting in frame loss.
2. NVMe recovery procedures were further defined and documented in later revisions of ratified TPs.
3. New FC Link Services were defined for faster error recovery without protocol layer notification.
4. Improvements were made in FC-NVMe and also SCSI FCP-5

FC-NVMe-2 focused on enhanced/refined error recovery – also documented in FC-FS-6 as a result FC-NVMe-2 has industry leading error detection and recovery, centralized fabric control, side-by-side SCSI FCP and robust hardened discovery and name service, zoning and security.

1. Detected error recovery at the transport layer i.e., Sequence Level Error Recovery (SLER)
2. Eliminate as much as possible the dependency on protocol layer for error recovery
3. Sequence Level Error Recovery (SLER), which allows error recovery by using sequence re-transmissions
4. Accomplished via new commands (FLUSH and Responder Error Detected – RED)
5. Support added for confirmed completion – a mechanism so that the target and initiator ports can use messages to determine successful completion of all sequences within a given exchange

Parallel FC-PI-7 (FC-PI-7P)

- FC-PI-7P specifies the parallel four lane variant supporting a signaling rate of 256GFC
  - ✓ is in development – draft is 1.x has been crafted in Feb.2020

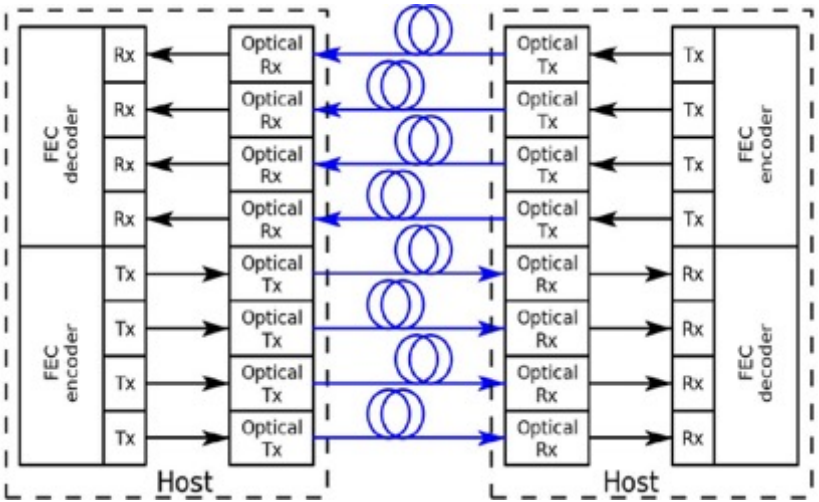

- 64GFC is described in FC-PI-7 – an ANSI standard
- 32GFC and 128GFC are described in FC-PI-6 and FC-PI-6P

Beyond B2B Credit Zero Detection

SAN congestion is a reduction in the throughput of the SAN

- Known to affect most SANs without administrators knowing – not easy to detect without SAN analytics
- SAN congestion is a term covering at least four behaviors of an FC SAN:
  - Slow drain devices - devices withholding the ability of the FC SAN to send traffic
  - Speed mismatches between host and target
  - Excessive Temporal Proximate I/O (micro bursts on a target port)
  - B2B credit return: stalling of R_RDY transmissions (by targets and initiators) causing back pressure to the SAN fabric, and possibly an ISL, which may impact many devices

FC flow control attempts to minimize the chance of dropped frames by transmitting when the receiver has a buffer

- For each frame sent, an R_RDY (B2B Credit) should be returned
- R_RDYs are returned once an occupied receive buffer location has been handled
- R_RDYs are not sent reliably – they can be corrupted/lost or <u>just withheld i.e., stalled</u>
- B2B credit automated non-disruptive recovery Link Credit Reset is a default in today's FC fabrics
- Each side informs the other side of the number of buffer credits it has
- When at 0 Tx credits, no frames can be sent! If at 0 Tx credits long enough – begin automatic recovery

B2B credits are agreed to during login exchange of parameters

- ✓ Dynamic B2B Credit Recovery is part of capability exchange (see FC-FS-4) – B2B recovery

Fabric Notifications – Help from the Ends

Extend Exchange Diagnostic Capabilities ELS support of Register Diagnostic Functions (RDF) and Fabric Performance Impact Notification (FPIN). End nodes can be taught to help with fabric congestion problems!

FC-LS-5 and FC-FS-6 modifications for congestion notifications, add descriptors:

- Congestion Detection Capability descriptor
- Link Integrity Notification descriptor
- Delivery Notification descriptor
- Peer Congestion Notification descriptor
- Congestion Notification descriptor
- Fabric Performance Impact Notification (FPIN) Registration descriptor

Add link primitives as notifications:

ARB(F1) Warning Congestion Signal
ARB(F7) Alarm Congestion Signal

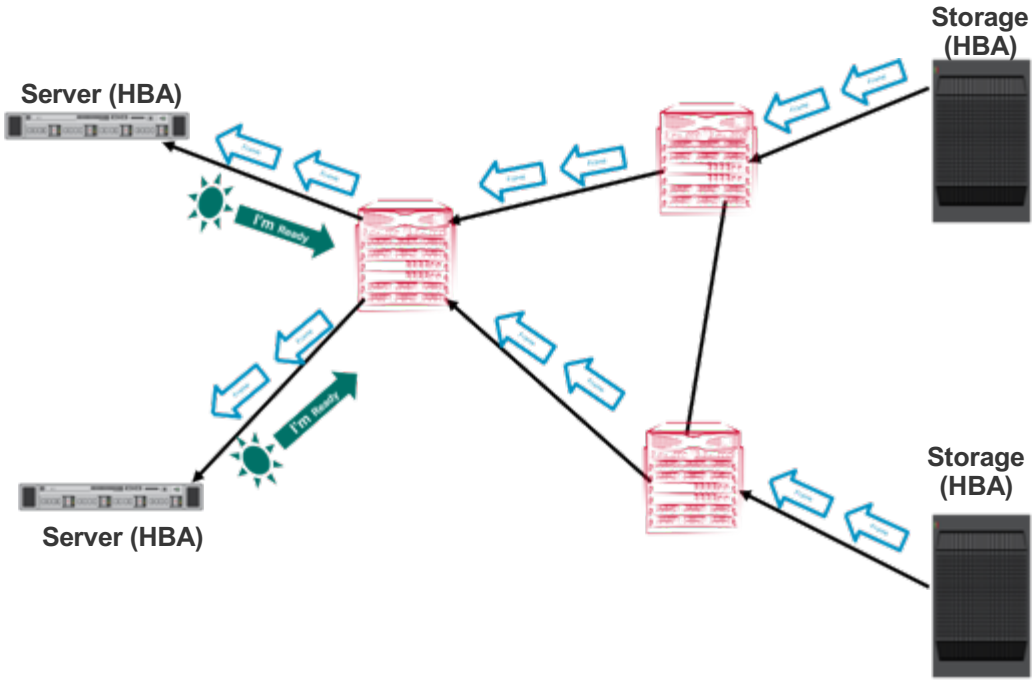

Agenda

Q&A and wrap up

After this Webcast

- Please rate this event – we value your feedback
- We will post a Q&A blog at http://fibrechannel.org/ with answers to the questions we received today
- Follow us on Twitter @FCIAnews for updates on future FCIA webcasts
- Visit our library of FCIA on-demand webcasts at http://fibrechannel.org/webcasts/ to learn about:
  - Fibre Channel Fundamentals
  - FC-NVMe
  - Long Distance Fibre Channel
  - Fibre Channel Speedmap
  - FCIP (Extension): Data Protection and Business Continuity
  - Fibre Channel Performance
  - FICON
  - Fibre Channel Cabling
  - 64GFC
  - FC Zoning Basics

Our Next FCIA Webcast:

The Current State of FC-NVMe

June 9, 2020

10:00 am PT /1:00 pm ET

Register here:

https://www.brighttalk.com/webcast/14967/395509

Thank You

FCIA

FIBRE CHANNEL INDUSTRY ASSOCIATION